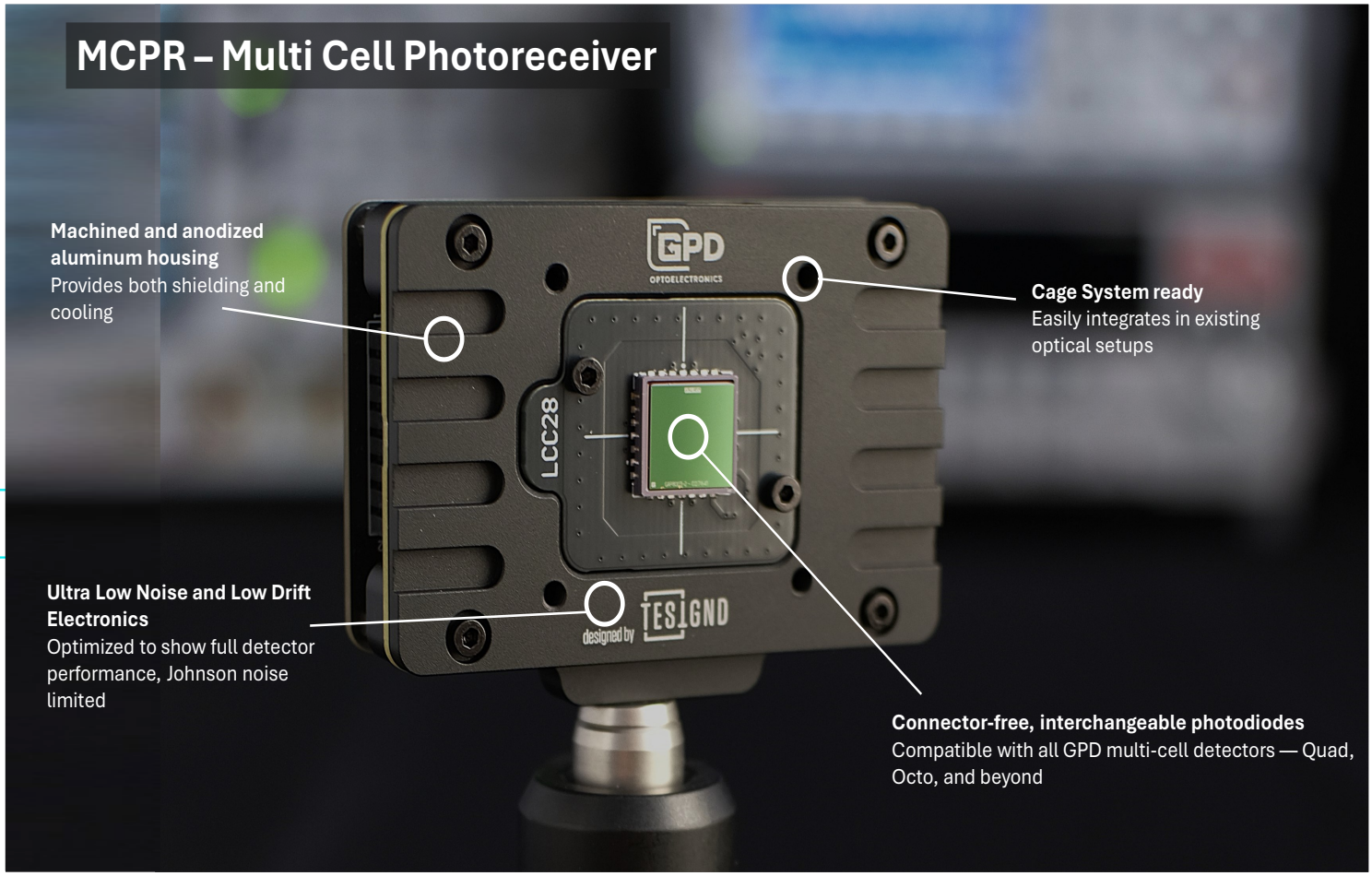

Applications

- Testing of Free Space Optical Comm
- Optical Bench Beam Steering
- Polarization Testing
- Multi Wavelength Photoreceiver

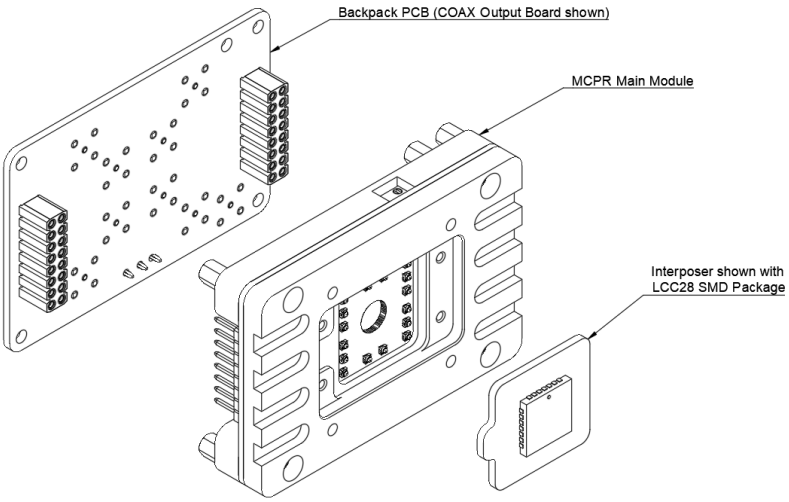

7 Manor Parkway, Salem, NH 03079 USA
tel: (603) 894-6865 | sales@gpd-ir.com

Rev.#: 202501

GPD OPTOELECTRONICS

MCPR

Photodetector Develop Kit

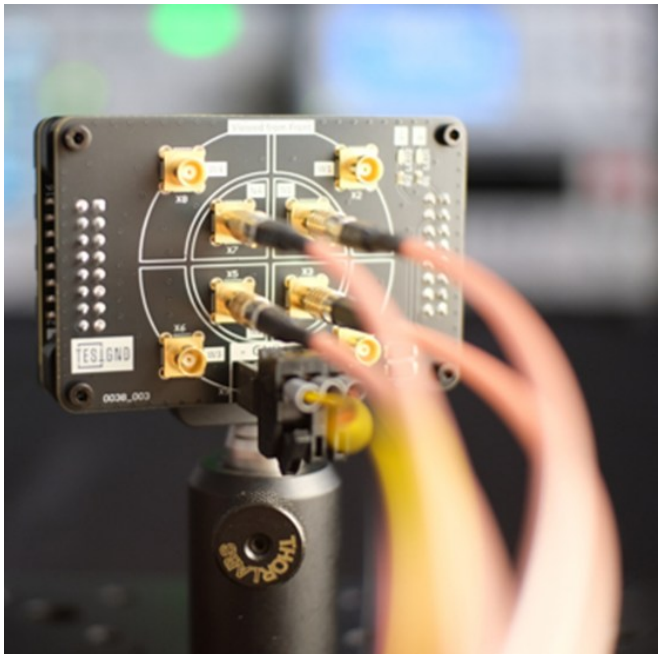

Features

- Plug & Play Solution for wide variety of GPD Photodiodes
- Ultra Low Noise Electronics
- 8 Channel Integrated Transimpedance Amplifiers
- Completely Shielded Electronics
- Solderless Hi Speed connection to Photodiodes
- Open design allows integration with external electronics

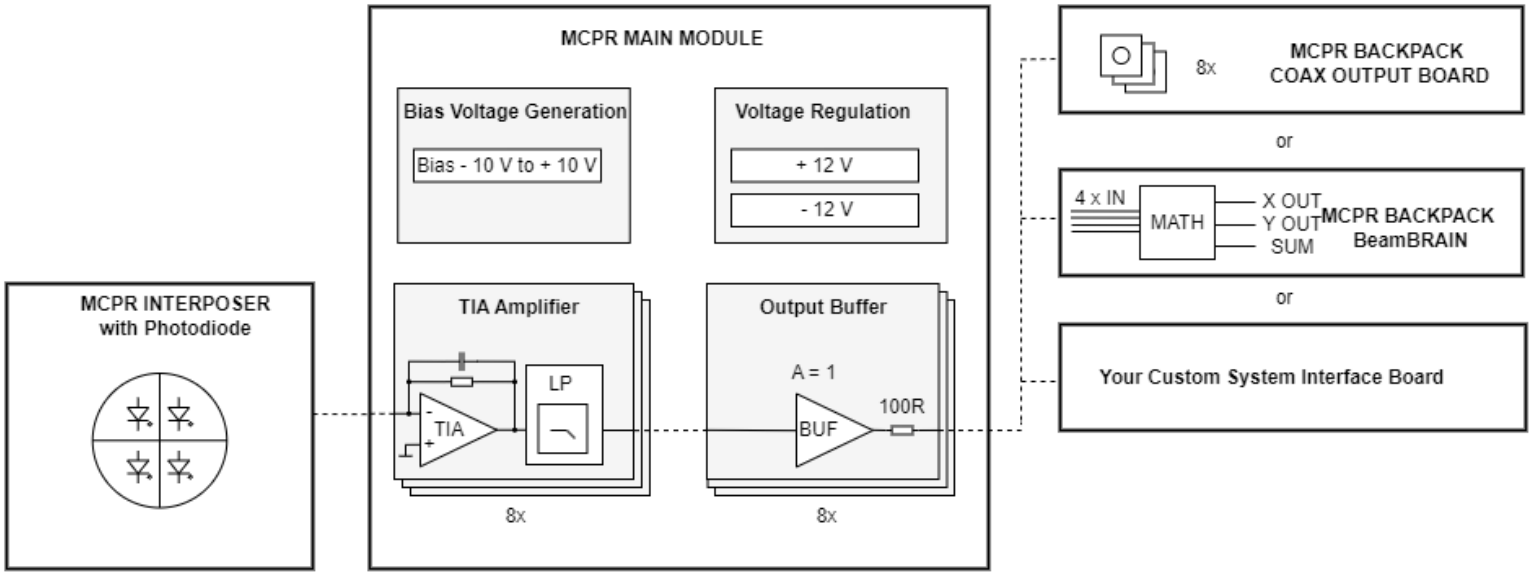

16 PIN Spring Contact

8x PD Anode ⇨
1x PD Cat. ⇔ 1x Bias Voltage
1x GND ⇔ 1x GND
6x AUX Channels ⇔ 6x AUX Channels

2 x 16 Pin 2.54mm Pitch Pin Header

8 x OUT ⇨
1x Bias Voltage ⇦ Bias Voltage Monitor
11 x GND ⇔ 11 x GND
6x AUX Channels ⇔ 6x AUX Channels
VIN ⇦ VIN

7 Manor Parkway, Salem, NH 03079 USA
tel: (603) 894-6865 | sales@gpd-ir.com

Rev.#: 202501